GB

ESAB®

Origo™

Mig C141/ C151
Mag C171/ C201/ C251

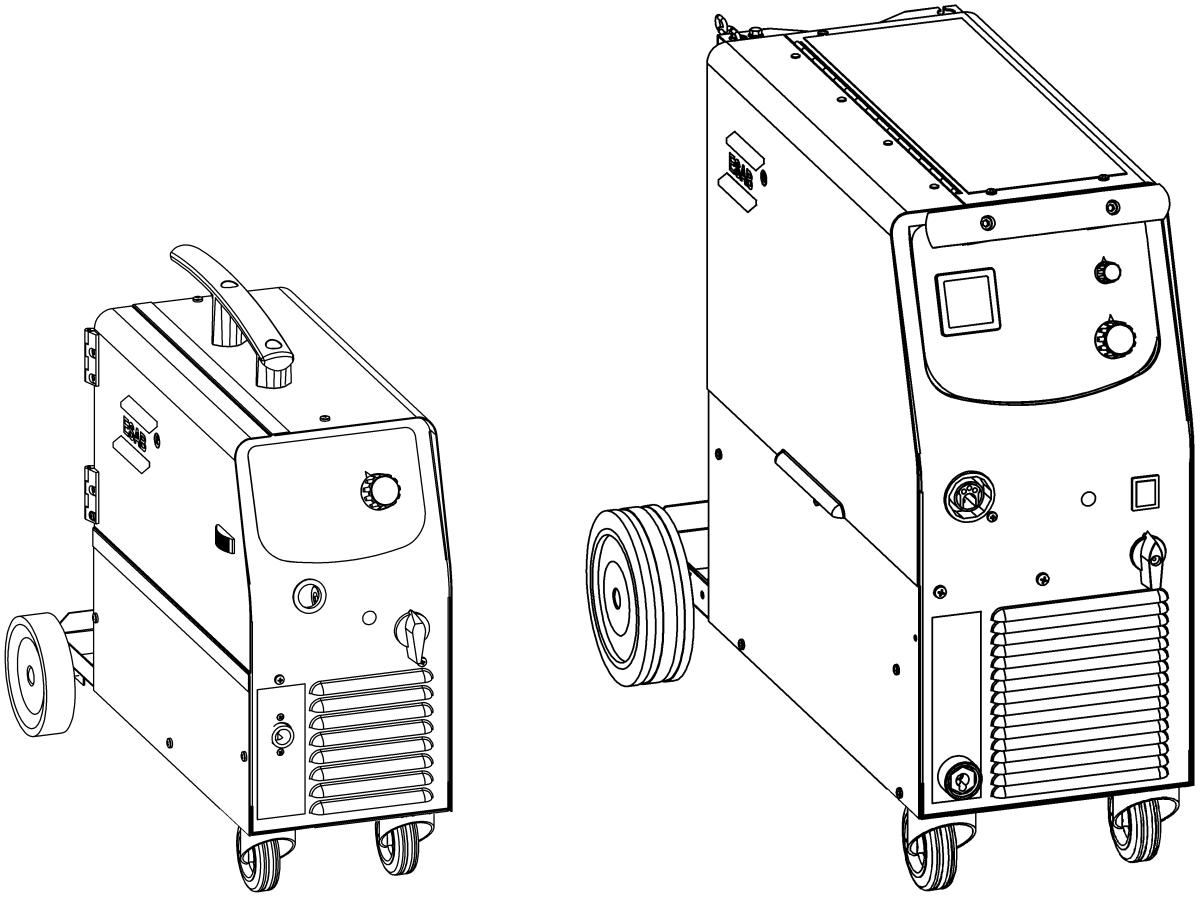

Instruction manual

0463 326 001 GB 20120528

Valid for serial no. 736-xxx-xxxx

DECLARATION OF CONFORMITY

In Accordance with

The Low Voltage Directive 2006/95/EC of 12 December 2006, entering into force 16 January 2007

The EMC Directive 2004/108/EC of 15 December 2004, entering into force 20 July 2007

Type of equipment

Welding power sources for MIG/MAG welding

Brand name or trade mark

ESAB

Type designation etc.

Origo™ Mig C141/C151	Valid from serial number 736-xxx-xxxx (2007 w.36)
Origo™ Mag C171/C201/C251	Valid from serial number 736-xxx-xxxx (2007 w.36)

Manufacturer or his authorised representative established within the EEA

Name, address, telephone No, telefax No:

OZAS-ESAB Sp. z o.o.

ul.A.Struga 10 , 45-073 Opole , Poland

Phone: +48 77 4019200, Fax: +48 77 4019201

The following harmonised standard in force within the EEA has been used in the design:

EN 60974-1, Arc welding equipment – Part 1: Welding power sources

EN 60974-5, Arc welding equipment – Part 5: Wire feeders

EN 60974-10, Arc welding equipment – Part 10: Electromagnetic compatibility (EMC) requirements

Additional information: Restrictive use, Class A equipment, intended for use in locations other than residential

By signing this document, the undersigned declares as manufacturer, or the manufacturer's authorised representative established within the EEA, that the equipment in question complies with the safety requirements stated above.

Place and Date	Signature	Position
Opole , 2011-11-03	Dariusz Brudkiewicz Clarification	Managing Director OZAS-ESAB Sp. z o.o.

1 SAFETY

Users of ESAB equipment have the ultimate responsibility for ensuring that anyone who works on or near the equipment observes all the relevant safety precautions. Safety precautions must meet the requirements that apply to this type of equipment. The following recommendations should be observed in addition to the standard regulations that apply to the workplace.

All work must be carried out by trained personnel well-acquainted with the operation of the equipment. Incorrect operation of the equipment may lead to hazardous situations which can result in injury to the operator and damage to the equipment.

1. Anyone who uses the equipment must be familiar with:
   - its operation
   - location of emergency stops
   - its function
   - relevant safety precautions
   - welding and cutting
2. The operator must ensure that:
   - no unauthorised person is stationed within the working area of the equipment when it is started up.
   - no-one is unprotected when the arc is struck
3. The workplace must:
   - be suitable for the purpose
   - be free from drafts
4. Personal safety equipment
   - Always wear recommended personal safety equipment, such as safety glasses, flame-proof clothing, safety gloves.
   - Do not wear loose-fitting items, such as scarves, bracelets, rings, etc., which could become trapped or cause burns.
5. General precautions
   - Make sure the return cable is connected securely.
   - Work on high voltage equipment **may only be carried out by a qualified electrician.**
   - Appropriate fire extinquishing equipment must be clearly marked and close at hand.
   - Lubrication and maintenance must **not** be carried out on the equipment during operation.

CAUTION

Read and understand the instruction manual before installing or operating.

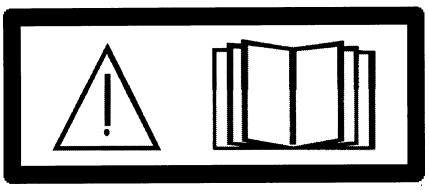

WARNING

Arc welding and cutting can be injurious to yourself and others. Take precautions when welding and cutting. Ask for your employer's safety practices which should be based on manufacturers' hazard data.

ELECTRIC SHOCK - Can kill
- Install and earth the unit in accordance with applicable standards.
- Do not touch live electrical parts or electrodes with bare skin, wet gloves or wet clothing.
- Insulate yourself from earth and the workpiece.
- Ensure your working stance is safe.

FUMES AND GASES - Can be dangerous to health
- Keep your head out of the fumes.
- Use ventilation, extraction at the arc, or both, to take fumes and gases away from your breathing zone and the general area.

ARC RAYS - Can injure eyes and burn skin.
- Protect your eyes and body. Use the correct welding screen and filter lens and wear protective clothing.
- Protect bystanders with suitable screens or curtains.

FIRE HAZARD
- Sparks (spatter) can cause fire. Make sure therefore that there are no inflammable materials nearby.

NOISE - Excessive noise can damage hearing
- Protect your ears. Use earmuffs or other hearing protection.
- Warn bystanders of the risk.

MALFUNCTION - Call for expert assistance in the event of malfunction.

Read and understand the instruction manual before installing or operating.

PROTECT YOURSELF AND OTHERS!

WARNING

Do not use the power source for thawing frozen pipes.

CAUTION

This product is solely intended for arc welding.

Dispose of electronic equipment at the recycling facility!

In observance of European Directive 2002/96/EC on Waste Electrical and Electronic Equipment and its implementation in accordance with national law, electrical and/or electronic equipment that has reached the end of its life must be disposed of at a recycling facility.

As the person responsible for the equipment, it is your responsibility to obtain information on approved collection stations.

For further information contact the nearest ESAB dealer.

ESAB can provide you with all necessary welding protection and accessories.

2 INTRODUCTION

Mig C141, Mig C151, Mag C171, Mag C201 and Mag C251 are step controlled power sources of a compact design, intended for welding with solid steel, stainless steel or aluminium wire as well as tubular wire with or without shielding gas.It is possible to weld with homogeneous wire/shielding gas and weld with gasless tubular wire by switching the + and - connections on the switching terminal by the wire feed unit.

ESAB's accessories for the product can be found on page 26.

2.1 Equipment

The power source is supplied with:

- Welding gun
- Return cable with return clamp
- Shelf for gas cylinder (C151-C251)
- Instruction manual

3 TECHNICAL DATA

	Mig C141	**Mig C151**	**Mag C171**
Voltage	**220-230V, 1~ 50/60Hz**	**220-230V, 1~ 50/60Hz**	**220-230V, 1~ 50/60Hz**
Permissible load at 100% duty cycle	42A/16.1V	67A/17.4V	76A/17.8V
60 % duty cycle	54A/16.7V	87A/18.3V	98A/18.9V
50 % duty cycle	-	95A/18.7V	-
25 % duty cycle	83A/18.2V	-	155A/21.7V
20 % duty cycle	100A/17.0V	150A/16.0V	170A/21.0V
Setting range (DC)	35A/15.7V-83A/18.2V (130A/13.4)	30A/15.5V-95A/18.7V (150A/16.0V)	30A/15.5V-155A/21.7 V (170A/21.0)
Open circuit voltage	18.7-25.1V	17.3-24.3V	22.4-44.5V
Open circuit power	75W	110W	270W
Power factor at max load	0.91	0.92	0.91
Control voltage	220-230V, 50/60Hz	220-230V, 50/60Hz	42V, 50/60Hz
Wire feed speed	2.0-14m/min	2.0-14m/min	1.0-17m/min
Burnback time	-	-	0.02-0.25s
Spot welding	-	-	0.2-2.5s
Welding gun connection	fixed	fixed	EURO
Wire dimension range	0.6-0.8(Fe) 1.0(Al) 0.8(cored) 0.8(CuSi)	0.6-0.8(Fe) 1.0(Al) 0.8(cored) 0.8(CuSi)	0.6-0.8(Fe) 1.0(Al) 0.8(cored) 0.8-1.0(CuSi)
Max diameter/weight of wire bobbin	200mm/5kg	200mm/5kg	300mm/15kg
Dimensions lxwxh	650x300x550	650x300x550	860x420x730
Weight	25kg	37,5kg	59kg

	Mig C141	Mig C151	Mag C171
Operating temperature	-10 ÷ +40°C	-10 ÷ +40°C	-10 ÷ +40°C
Enclosure class	IP 23	IP 23	IP 23
Application classification	S	S	S

	Mag C201	Mag C251
Voltage	**220-230V, 1~ 50/60Hz**	**220-230V, 1~ 50/60Hz**
Permissible load at 100% duty cycle	90A/18.5V	110A/19.5V
60 % duty cycle	115A19.7V	140A/21.0V
30 % duty cycle	-	200A/24.0V
23 % duty cycle	185A/23.3V	-
20 % duty cycle	200A/23.0V	250A/21.0V
Setting range (DC)	30A/15.5V-185A/23.3V (200A/23.0V)	40A/16.0V-200A/24.0V (250A/21.0V)
Open circuit voltage	19.6-44.9V	19.0-41.5V
Open circuit power	120W	200W
Power factor at max load	0.89	0.92
Control voltage	42V, 50/60Hz	42V, 50/60Hz
Wire feed speed	1.0-17m/min	1.9-19m/min
Burnback time	0.02-0.25s	0-0.25s
Spot welding	0.2-2.5s	0.2-2.5s
Welding gun connection	EURO	EURO
Wire dimension range	0.6-1.0(Fe) 1.0(Al) 0.8-1.0(cored) 0.8-1.0(CuSi)	0.6-1.2(Fe) 1.0-1.2(Al) 0.8-1.2(cored) 0.8-1.0(CuSi)
Max diameter/weight of wire bobbin	300mm/15kg	300mm/15kg
Dimensions lxwxh	860x420x730	860x420x730
Weight	68kg	94kg
Operating temperature	-10 ÷ +40°C	-10 ÷ +40°C
Enclosure class	IP 23	IP 23
Application classification	S	S

Duty cycle

The duty cycle refers to the time as a percentage of a ten-minute period that you can weld or cut at a certain load without overloading. The duty cycle is valid for 40° C.

Enclosure class

The **IP** code indicates the enclosure class, i. e. the degree of protection against penetration by solid objects or water. Equipment marked **IP23** is designed for indoor and outdoor use.

Application class

The symbol S indicates that the power source is designed for use in areas with increased electrical hazard.

4 INSTALLATION

The installation must be carried out by a professional.

Note!
Connect the power source to the electricity mains with a network impedance of (C141 - 0.41; C151 - N/A; C171 - N/A; C201 - 0.32; C251 - 0.212) ohm or lower. If the network impedance is higher, there is a risk of flicker in the illuminators.

CAUTION

This product is intended for industrial use. In a domestic environment this product may cause radio interference. It is the user's responsibility to take adequate precautions.

4.1 Location

Position the welding power source in such a way that its cooling air inlets and outlets are not obstructed.

4.2 Assembly of components

WARNING!

For packing and shipment of the machine the wheels are detached from the unit.
Before use attach the wheels according to instruction.

4.2.1 Mig C141

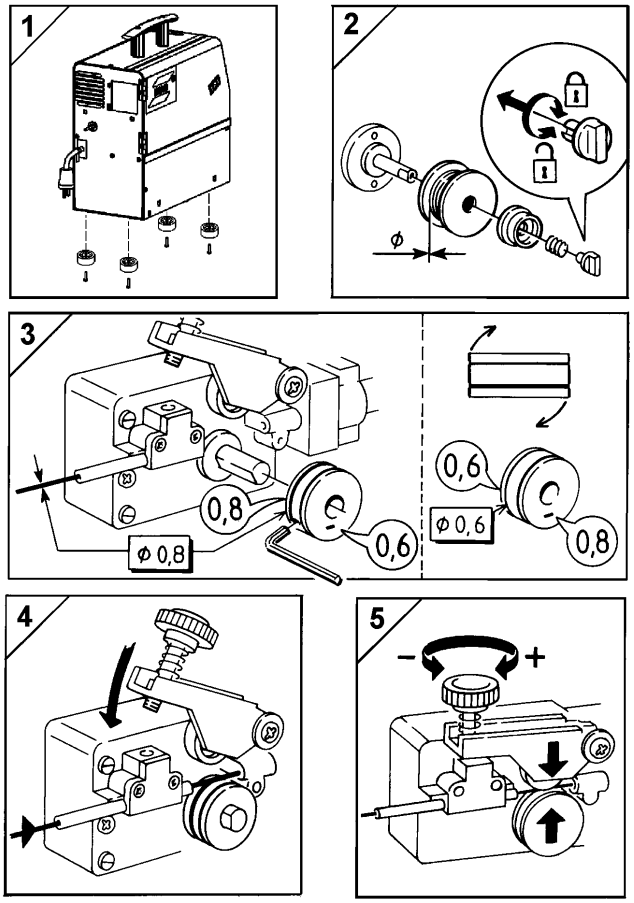

4.2.2 Mig C151

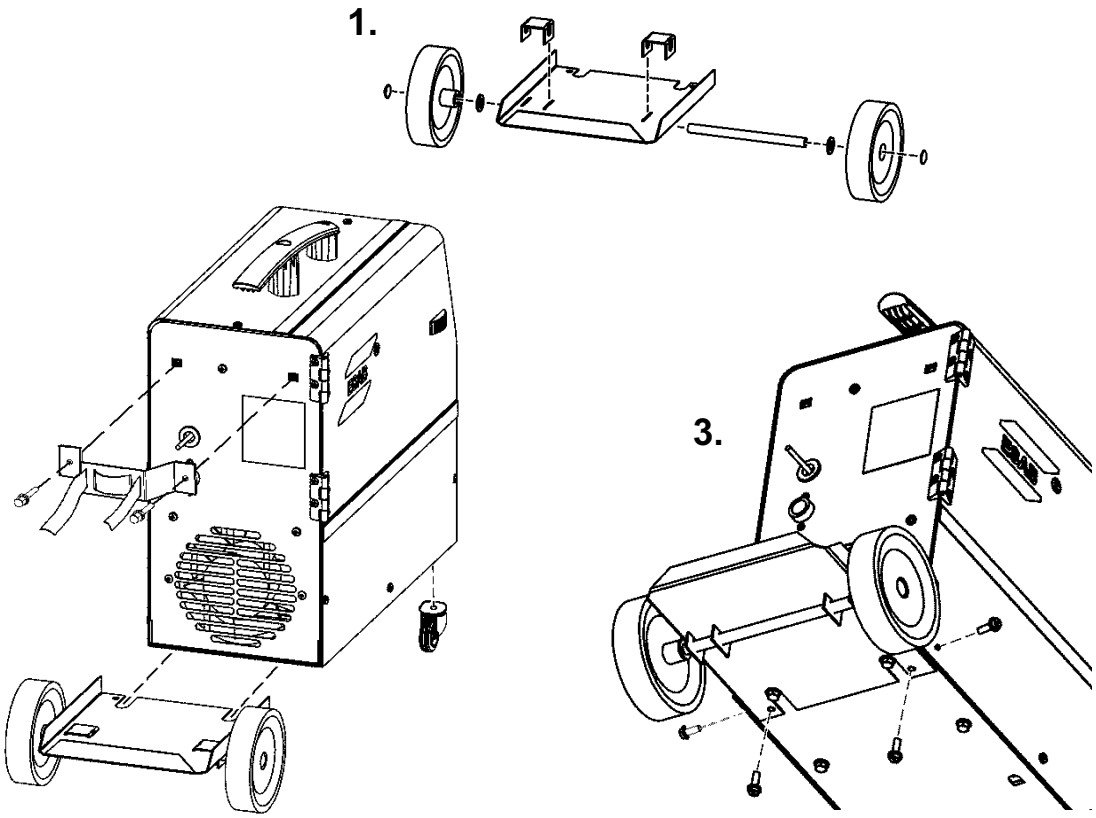

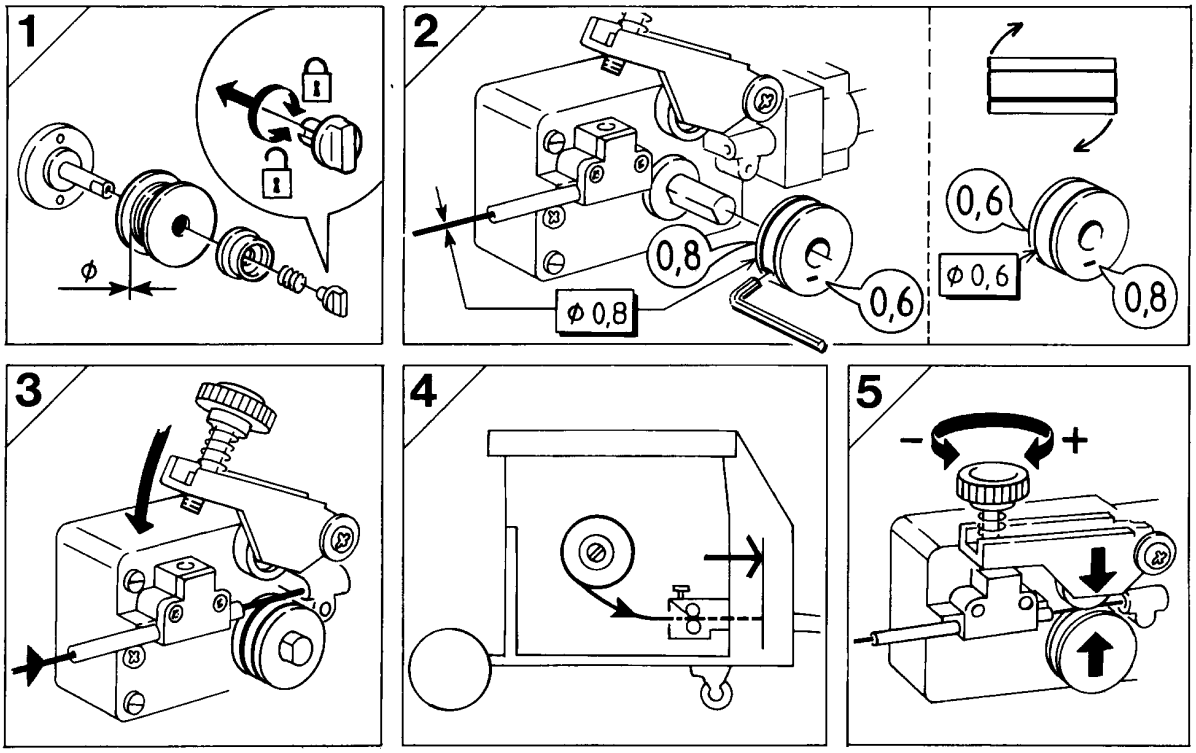

4.2.3 Mag C171/C201/C251

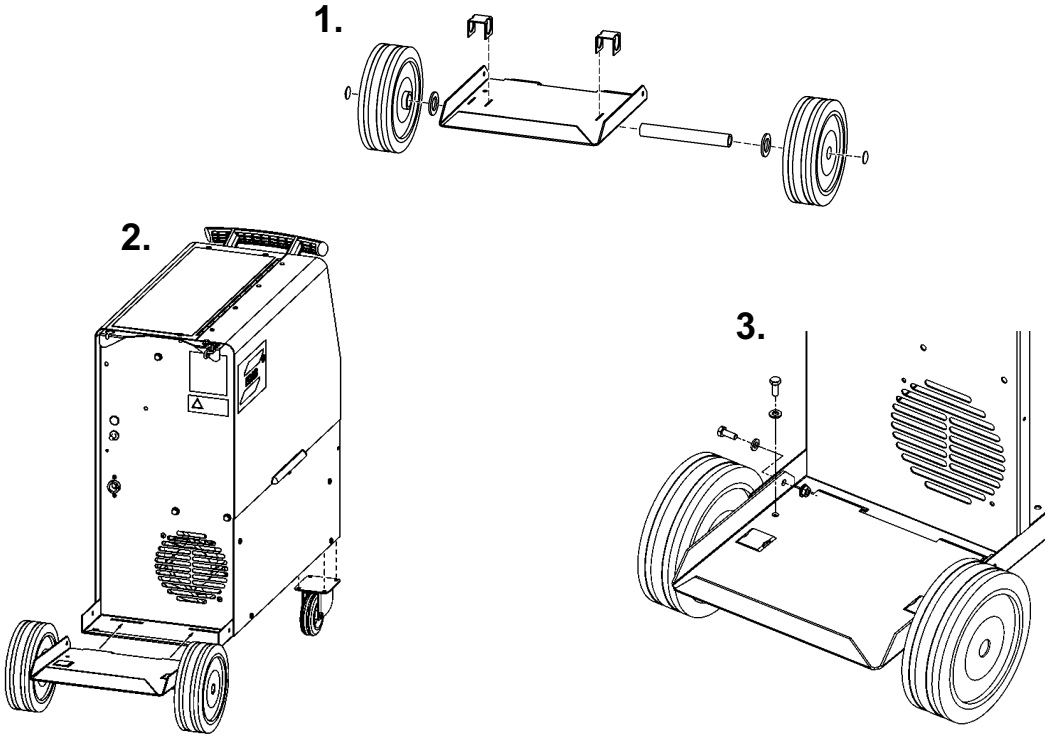

4.3 Electrical installation

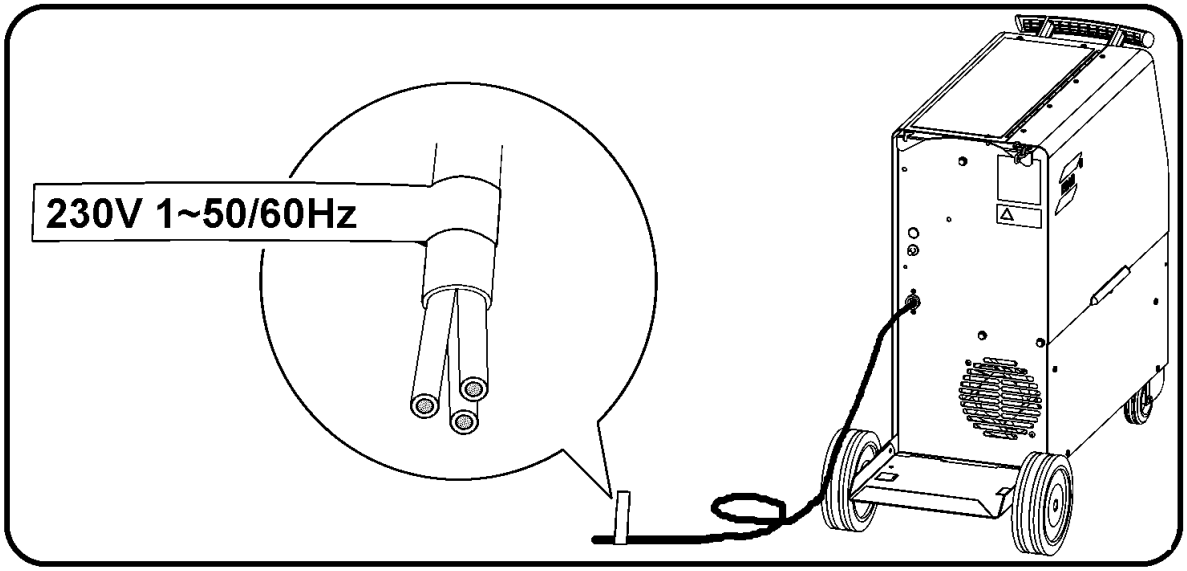

4.4 Mains power supply

Check that the unit is connected to the correct mains power supply voltage, and that it is protected by the correct fuse size. A protective earth connection must be made, in accordance with regulations.

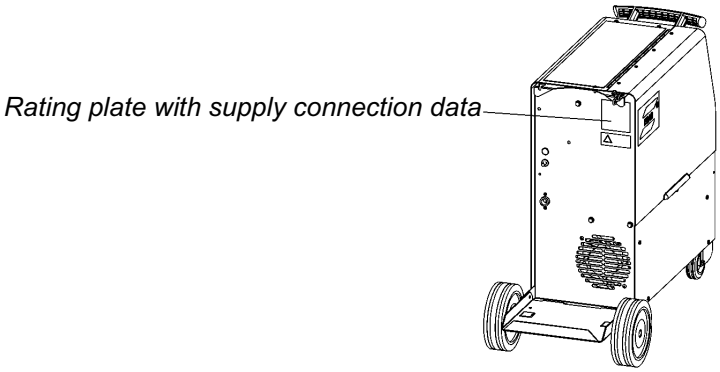

4.5 Recommended fuse sizes and minimum cable areas

	Mig C141	Mig C151	Mag C171	Mag C201	Mag C251
Voltage V	220-230V, 1~ 50/60Hz	220-230V, 1~ 50/60Hz	220-230V, 1~ 50/60Hz	220-230V, 1~ 50/60Hz	220-230V, 1~ 50/60Hz
Current A at 100% duty cycle	5.1	8.3	12.0	13.0	16.6
at 60% duty cycle	7.0	12.0	15.7	18.2	23.4
at % duty cycle	11.5 at 25%	13.0 at 50%	27.8 at 25%	36.2 at 23%	38.7 at 30%
at 20% duty cycle	13.8	20.4	29.7	39.0	47.5
Cable area mm^2	3 x 1.5	3 x 1.5	3 x 1.5	3 x 2.5	3 x 4.0
Fuse slow A	10	10 (16*)	16	20	35

NB: *The mains cable areas and fuse sizes shown above are in accordance with Swedish regulations. They may not be applicable in other countries: make sure that the cable area and fuse sizes comply with the relevant national regulations.*
**- In the supply networks of high level of short circuit power (low impedance of network) it is recommended to use 16A fuse.*

5 OPERATION

General safety regulations for handling the equipment can be found on page 4. Read through before you start using the equipment!

WARNING

Rotating parts can cause injury, take great care.

WARNING

To prevent the reel from sliding off the hub: Lock the reel in place by turning the red knob as shown on the warning label attached next to the hub.

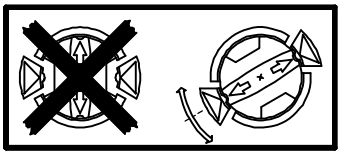

WARNING

Secure the equipment - particularly if the ground is uneven or sloping.

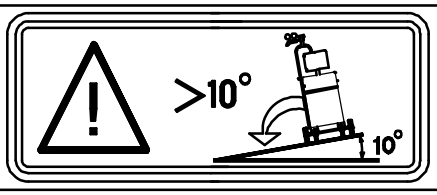

5.1 Connection and control devices

1 Mains supply switch with indicator lamp, only in C171/C201/C251

2 Orange indicator lamp, overheating

3 Welding voltage switch
C141: OFF + 4 steps (mains ON/OFF)
C151: OFF + 7 steps (mains ON/OFF)
C171: 8 steps
C201: 12 steps
C251: 12 steps

4 EURO - connector for welding gun, only in C171/C201/C251

4a Welding gun, fixed, only in C141/C151

5 Connection for return cable (-),only in C251

5a Return cable with clamp, fixed, only in C140/C150/C170/C200

6 Knob for spot welding - ON/OFF and time setting, only in C171/C201/C251

7 Knob for wire speed setting

8 Digital instrument - V / A, only in C171/C201/C251 (option,see page 26)

9 Knob for burn-back time setting.
In C251 located in wire feeder compartment.
In C171/C201 located on control board.

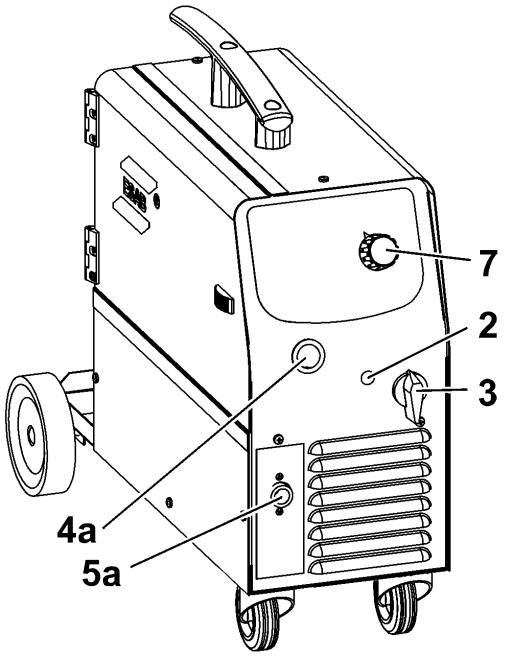

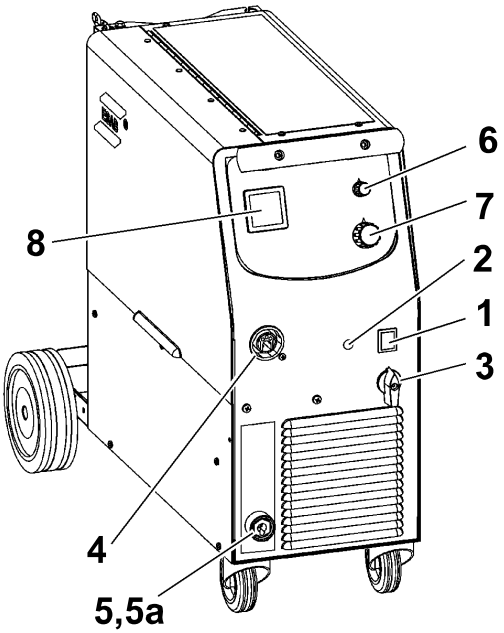

5.2 Welding without gas

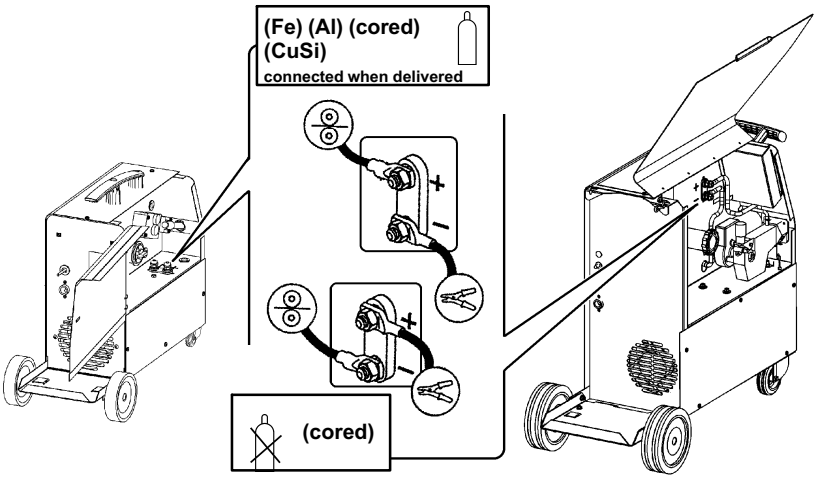

5.3 Wire feed pressure

Start by making sure that the wire moves smoothly through the wire guide. Then set the pressure of the wire feeder's pressure rollers. It is important that the pressure is not too great.

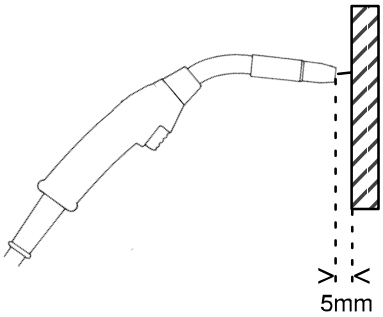

cmek0p10

Fig 1

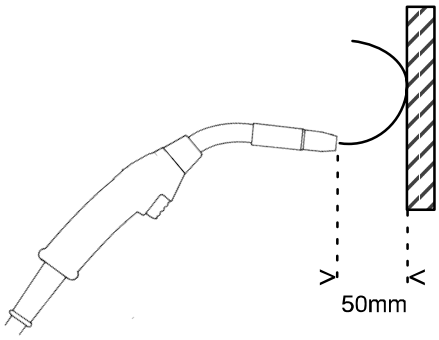

Fig 2

To check that the feed pressure is set correctly, you can feed out the wire against an insulated object, e.g. a piece of wood.

When you hold the gun approx. 5 mm from the piece of wood (fig. 1) the feed rollers should slip.

If you hold the gun approx. 50 mm from the piece of wood, the wire should be fed out and bend (fig. 2).

5.4 Replacing and inserting wire

- Open the side panel.
- Disconnect the pressure sensor by folding it backwards, the pressure rollers slide up.
- Straighten the new wire for 10-20 cm. File away burrs and sharp edges from the end of the wire before inserting it into the wire feed unit.
- Make sure that the wire goes properly into the feed roller track and into the outlet nozzle and the wire guide.
- Secure the pressure sensor.
- Close the side panel.

5.5 Overheating protection

When the machine is switched on with the mains switch, [1] or [3] depending on machine model, indicator lamp [1] is on and lamp [2] off - the machine is ready to operate. If the internal temperature becomes too high, the welding is interrupted and disabled. This state is indicated by lighting of the orange indicator lamp [2] on the front of the machine. It resets automatically when the temperature has fallen.

6 MAINTENANCE

Regular maintenance is important for safe, reliable operation.

CAUTION

All guarantee undertakings from the supplier cease to apply if the customer attempts any work to rectify any faults in the product during the guarantee period.

6.1 Inspection and cleaning

Check regularly that the power source is free from dirt.

The power source should be regularly blown clean using dry compressed air at reduced pressure. It should be cleaned more frequently in dirty environments. Otherwise the air inlet/outlet may become blocked and cause overheating.

Welding gun

- The welding gun's wear parts should be cleaned and replaced at regular intervals in order to achieve trouble-free wire feed. Blow the wire guide clean regularly and clean the contact tip.

The brake hub

The hub is adjusted when delivered, if readjustment is required, follow the instructions below. Adjust the brake hub so that wire is slightly slack when wire feed stops.

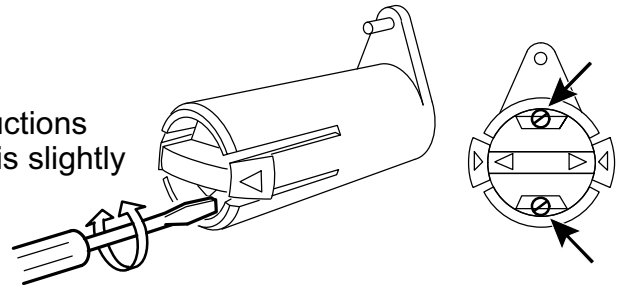

- **Adjusting the braking torque:**
  - Turn the red handle to the locked position.
  - Insert a screwdriver into the springs in the hub.

  Turn the springs clockwise to reduce the braking torque

  Turn the springs counter-clockwise to increase the braking torque. **NB:** Turn both springs the same amount.

7 FAULT TRACING

Try these recommended checks and inspections before sending for an authorised service technican.

Type of fault	Actions
No arc	• Check that the mains power supply switch is turned on. • Check that the welding current supply and return cables are correctly connected. • Check that correct current value is set.
Welding current is interrupted during welding	• Check whether the thermal overload trip has operated (indicated by the orange lamp on the front). • Check the main power supply fuses.
Thermal overload trips operate frequently	• Check to see whether the air inlets/outlets are clogged. • Make sure that you are not exceeding the rated data for the power source (i.e. that the unit is not being overloaded).
Poor welding performance	• Check that the welding current supply and return cables are correctly connected. • Check that the correct current value is set. • Check that the correct welding wires are being used. • Check the main power supply fuses. • Check the wire feed unit - if proper rolls are applied and properly set the pressure of the wire feeder's pressure rollers

8 ORDERING OF SPARE PARTS

Repair and electrical work should be performed by an authorised ESAB service technician. Use only ESAB original spare and wear parts.

Mig C141/ C151 Mag C171/ C201/ C251 is designed and tested in accordance with the international and European standards **IEC-/ EN 60974-1**, **IEC-/ EN 60974-10**. It is the obligation of the service unit which has carried out the service or repair work to make sure that the product still conforms to the said standard.

Spare parts may be ordered through your nearest ESAB dealer, see the last page of this publication.

Diagram

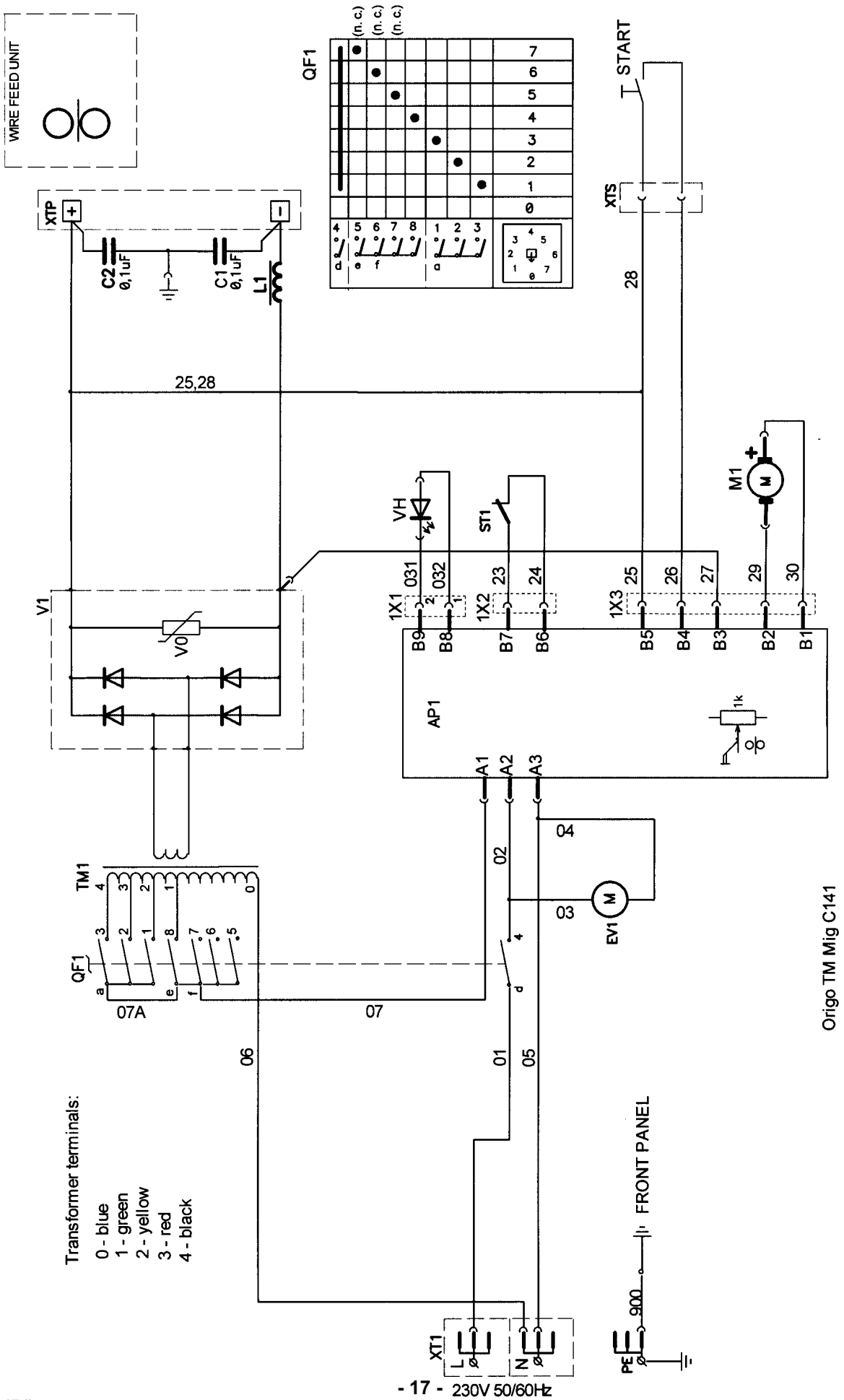

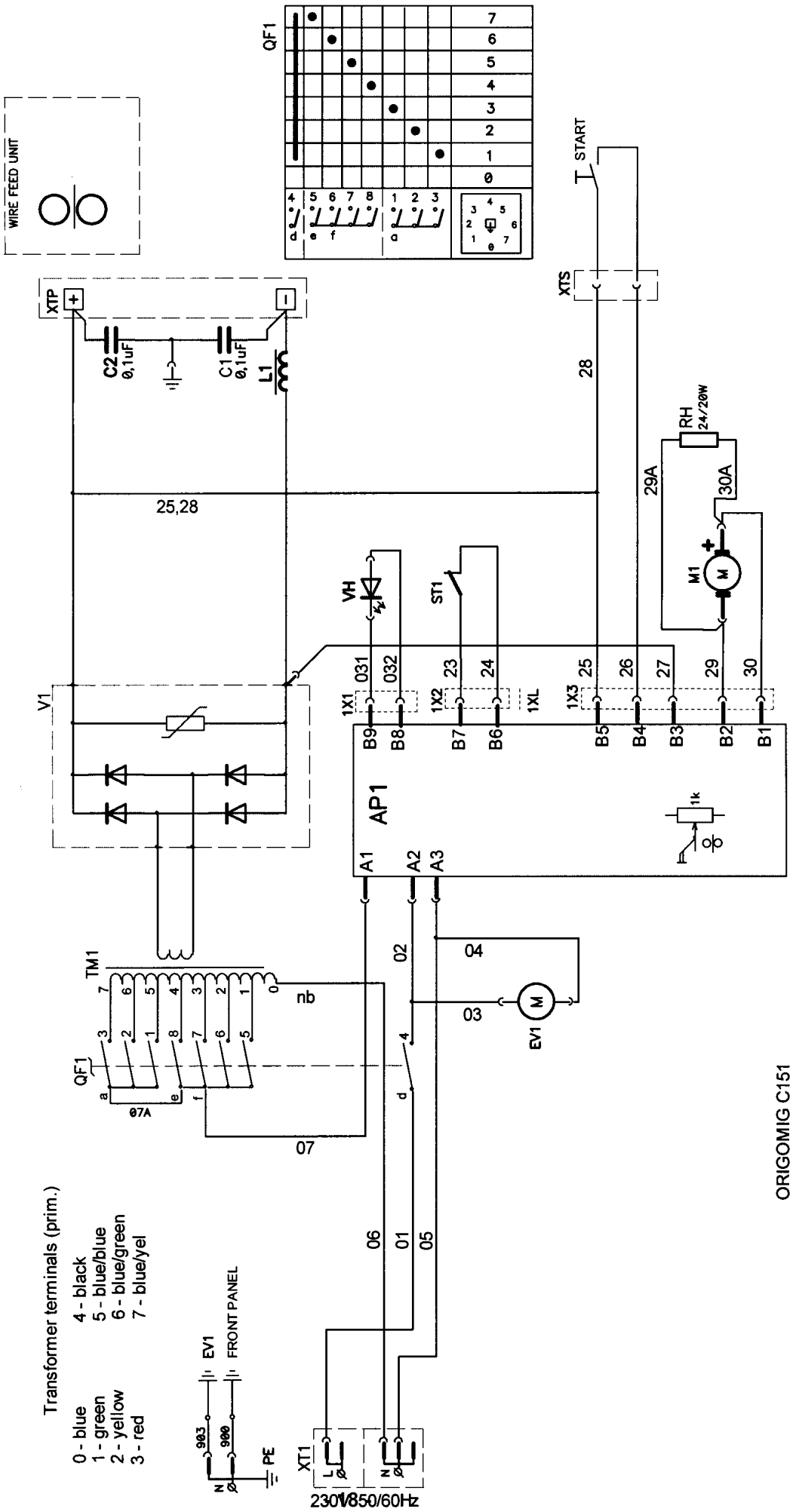
WIRE FEED UNIT
QF1
START
XTS
XTP
C2 0,1uF
C1 0,1uF
L1
28
RH 24/20W
29A
30A
25,28
M1
VH
ST1
031
032
23
24
25
26
27
29
30
1X1
1X2
1XL
1X3
B9
B8
B7
B6
B5
B4
B3
B2
B1
V1
AP1
1k
A1
A2
A3
02
04
03
EV1
TM1
nb
07A
07
06
01
05
Transformer terminals (prim.)
0 - blue
1 - green
2 - yellow
3 - red
4 - black
5 - blue/blue
6 - blue/green
7 - blue/yel
EV1
FRONT PANEL
903
900
PE
XT1
230V/50/60Hz
ORIGOMIG C151

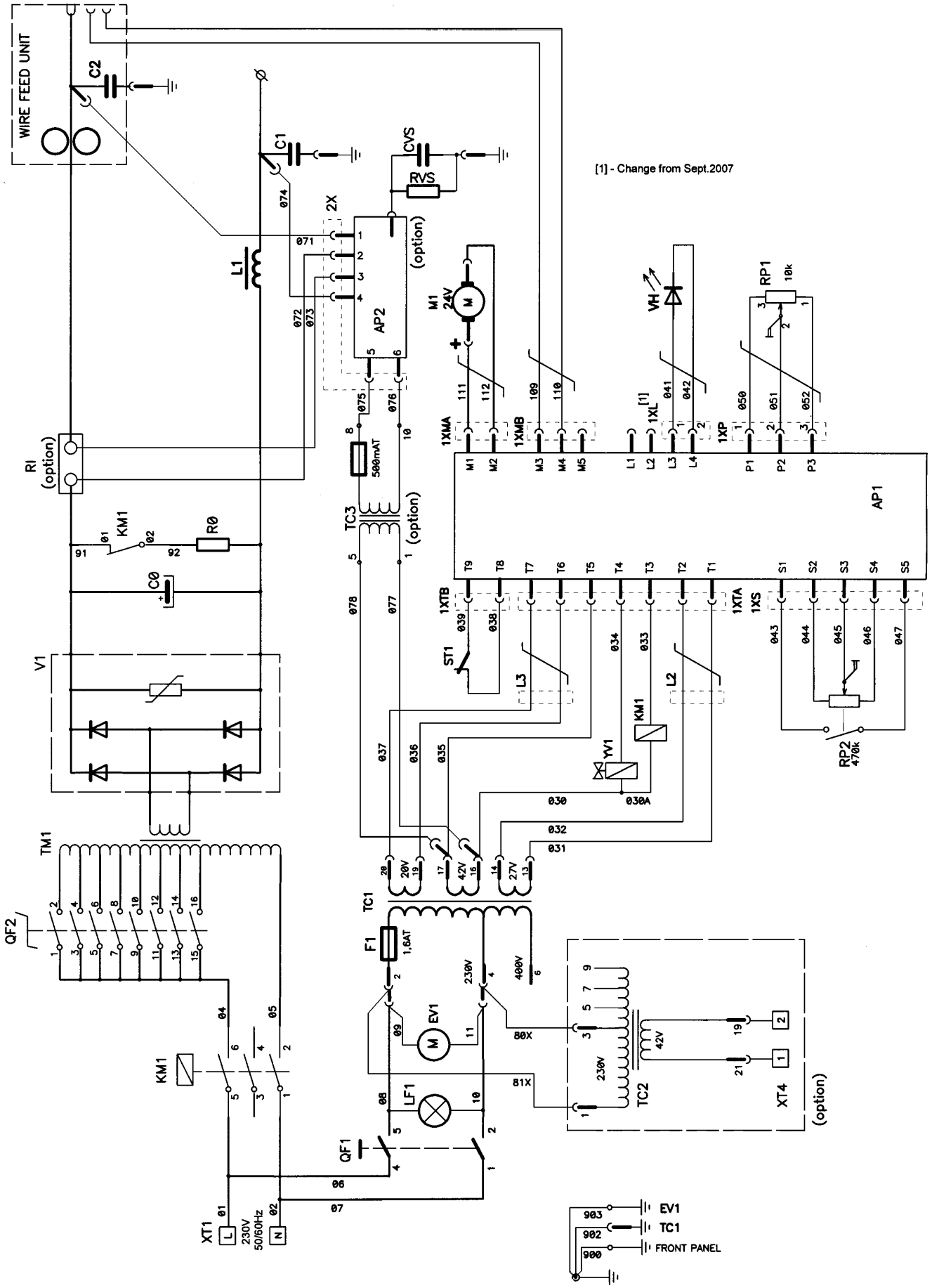
WIRE FEED UNIT
C2
C1
CVS
RVS
[1] - Change from Sept.2007
2X
AP2
(option)
L1
M1
24V
VH
RP1
10k
RI
(option)
KM1
R0
C0
TC3
500mAT
1XMA
1XMB
1XL
1XP
AP1
1XTB
1XTA
1XS
ST1
L3
L2
YV1
RP2
470k
V1
TM1
QF2
TC1
F1
1,6AT
20V
42V
27V
230V
400V
EV1
LF1
QF1
TC2
XT4
XT1
230V
50/60Hz
EV1
TC1
FRONT PANEL

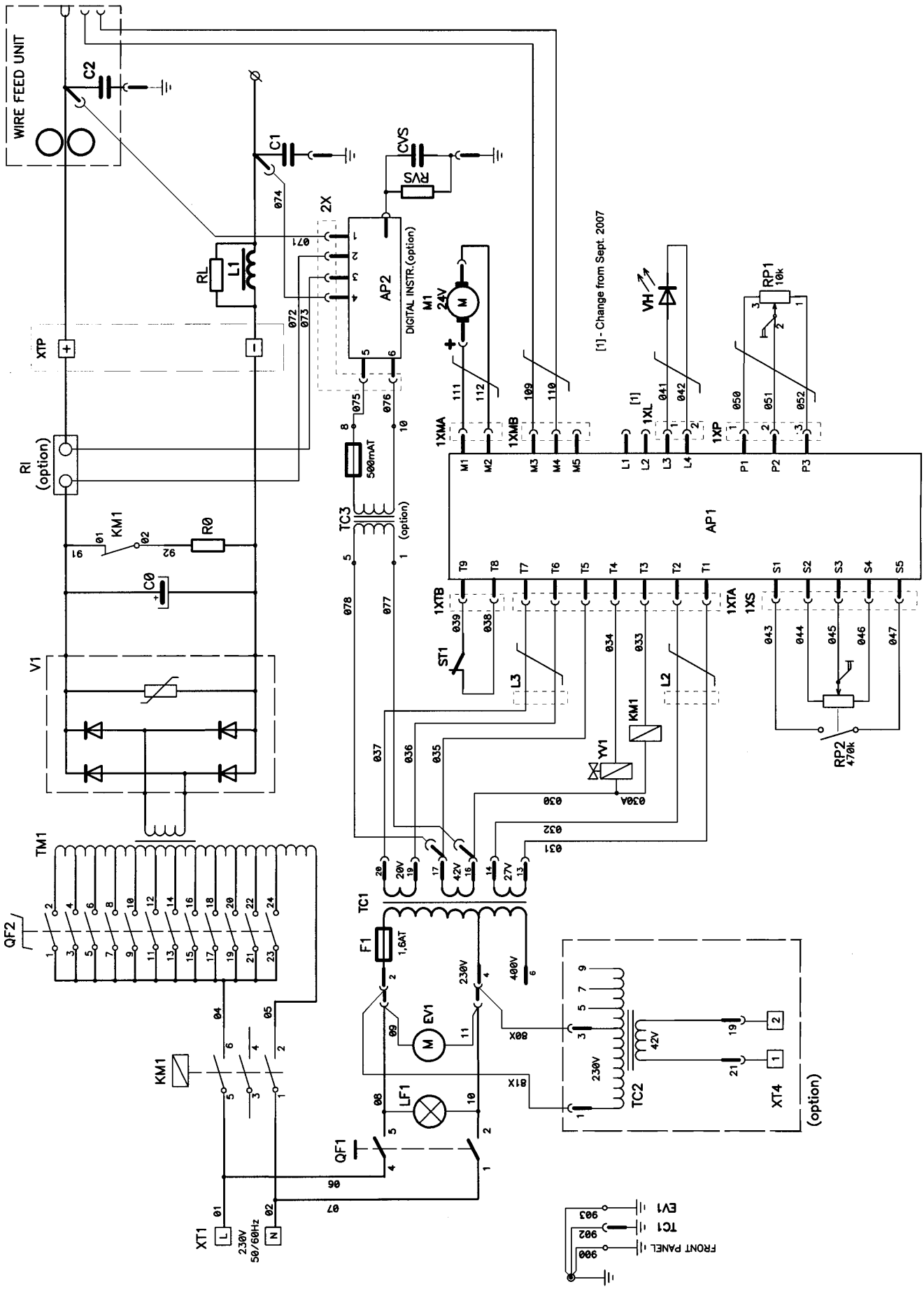
WIRE FEED UNIT
C2
C1
CVS
RVS
2X
AP2
DIGITAL INSTR.(option)
RL
L1
XTP
RI
(option)
KM1
R0
C0
V1
TM1
QF2
KM1
XT1
230V
50/60Hz
QF1
LF1
F1
1,6AT
TC1
EV1
TC2
XT4
(option)
TC3
(option)
500mAT
M1
24V
1XMA
1XMB
[1] - Change from Sept. 2007
VH
1XL
[1]
RP1
10k
1XP
AP1
1XTB
1XTA
1XS
ST1
L3
L2
KM1
YV1
RP2
470k
FRONT PANEL
TC1
EV1

(*) NOTE: – this fuse is not installed in the newer version of transformer !

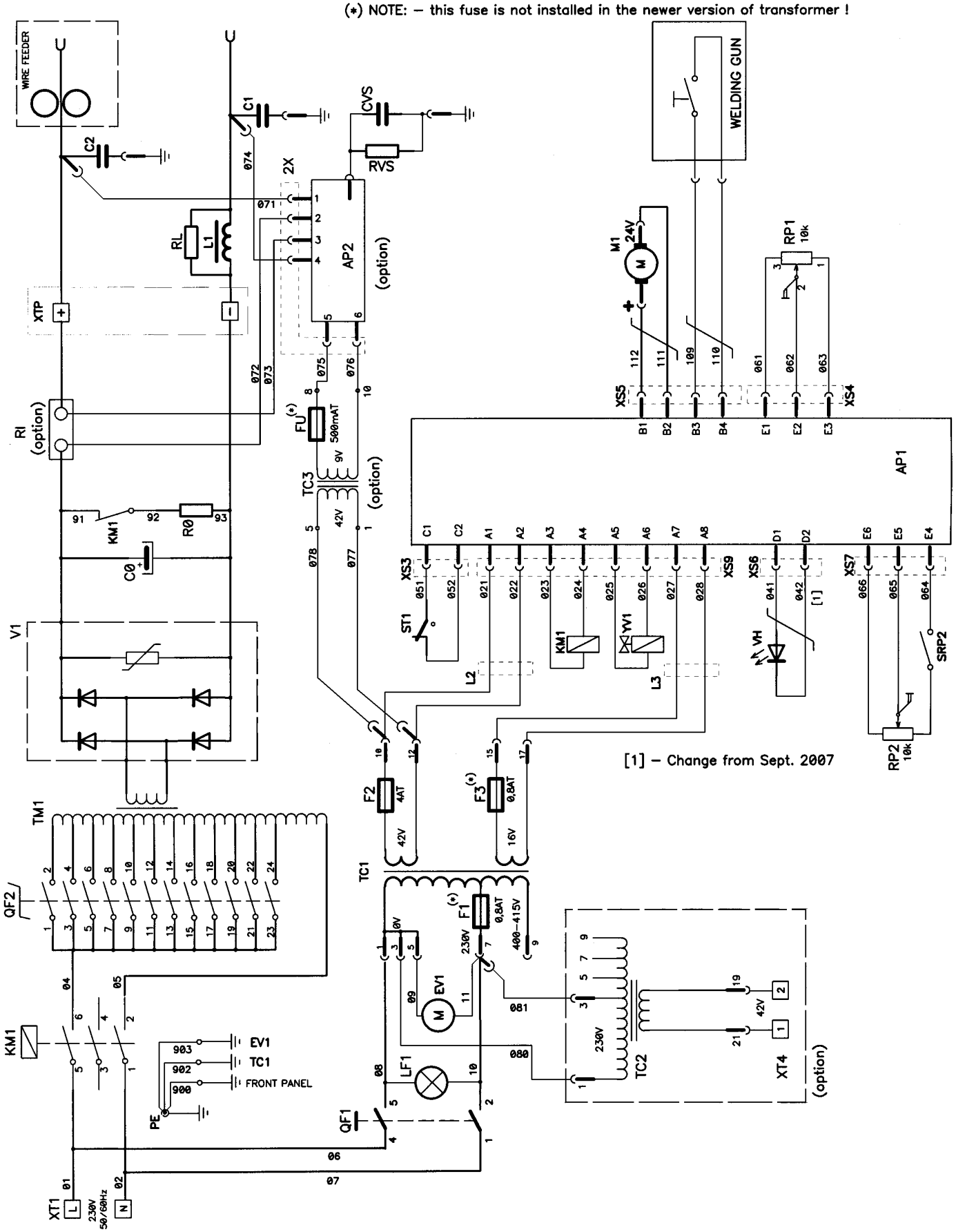

Order number

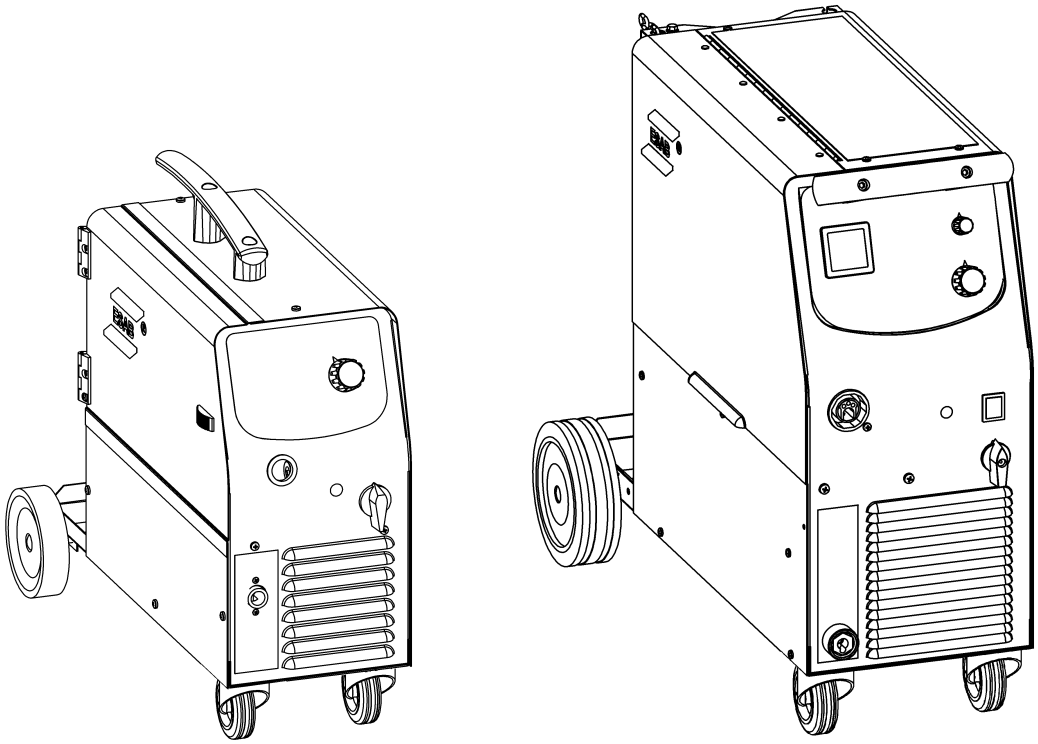

Ordering no.	Denomination	Notes
0349 311 170	Origo™ Mig C141	230V 1~50/60Hz
0349 311 180	Origo™ Mig C151	
0349 311 280	Origo™ Mig C171	
0349 311 290	Origo™ Mig C201	
0349 311 420	Origo™ Mig C251	

Technical documentation is available on the Internet at **www.esab.com**

Wear parts

(W. F. Mechanism 0469 475 880)

Item	Denomination	Ordering no.	Notes
A	Feed roller	0469 517 001 0349 311 443	Ø 0.6-0.8mm Fe, cored wire, CuSi Ø 1.0mm Al
B	Liner	0700 200 099 0349 311 441	Fe, cored wire, CuSi Al
C	Contact tip	0700 200 063 0700 200 064 0349 311 442	Ø 0.6mm Fe Ø 0.8mm Fe, cored wire, CuSi Ø 1.0mm Al

The rollers are marked with wire dimension in mm, some are also marked with inch.

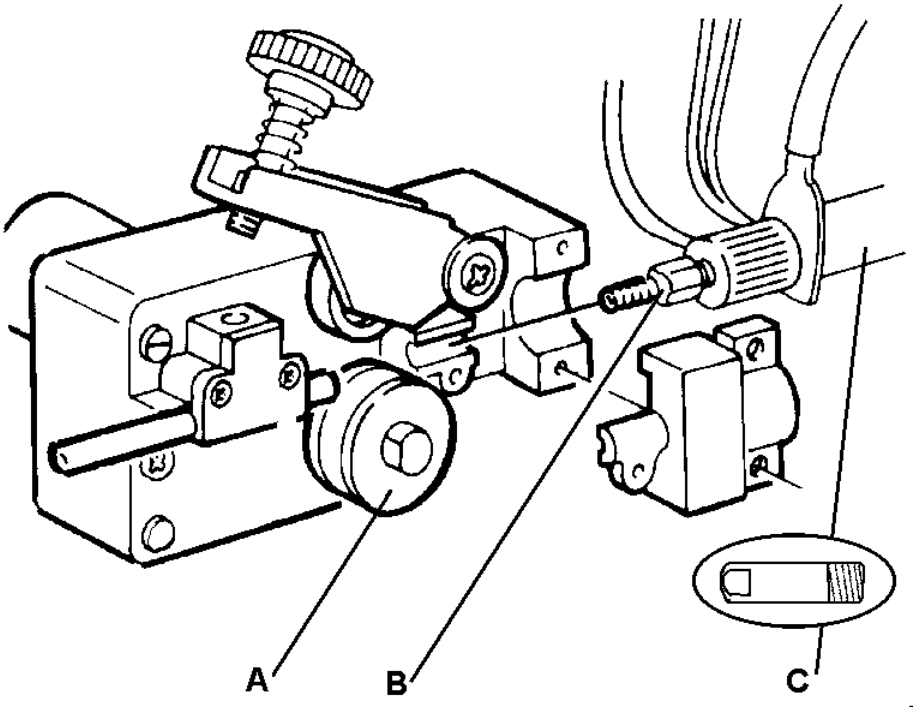

Welding with aluminium wires.

In order to weld with aluminium wires, proper rollers, nozzles and liners for aluminium wires MUST be used. It is recommended to use 3m long welding gun for aluminium wires, equipped with appropriate wear parts.

(W. F. Mechanism 0455 890 890 / 0455 890 882)

Item	Denomination	Ordering no.	Notes
A	Pressure roller	0455 907 001	
B	Feed roller	0367 556 001 0367 556 002 0367 556 003 0367 556 004	Ø 0.6-0.8mm Fe, Ss, cored wire. Ø 0.8-1.0mm Fe, Ss, cored wire. Ø 1.0-1.2mm Fe, Ss, cored wire. Ø 1.0-1.2mm Al wire.
C	Inlet nozzle	0466 074 001	
D	Insert tube	0455 894 001 0455 889 001	Plastic, must be used together with item 0455 885 001, for welding with Al wire. Steel, must be used together with item 0455 886 001.
E	Outlet nozzle	0455 885 001 0455 886 001	Must be used together with item 0455 894 001, for welding with Al wire. Must be used together with item 0455 889 001.

The rollers are marked with wire dimension in mm, some are also marked with inch.

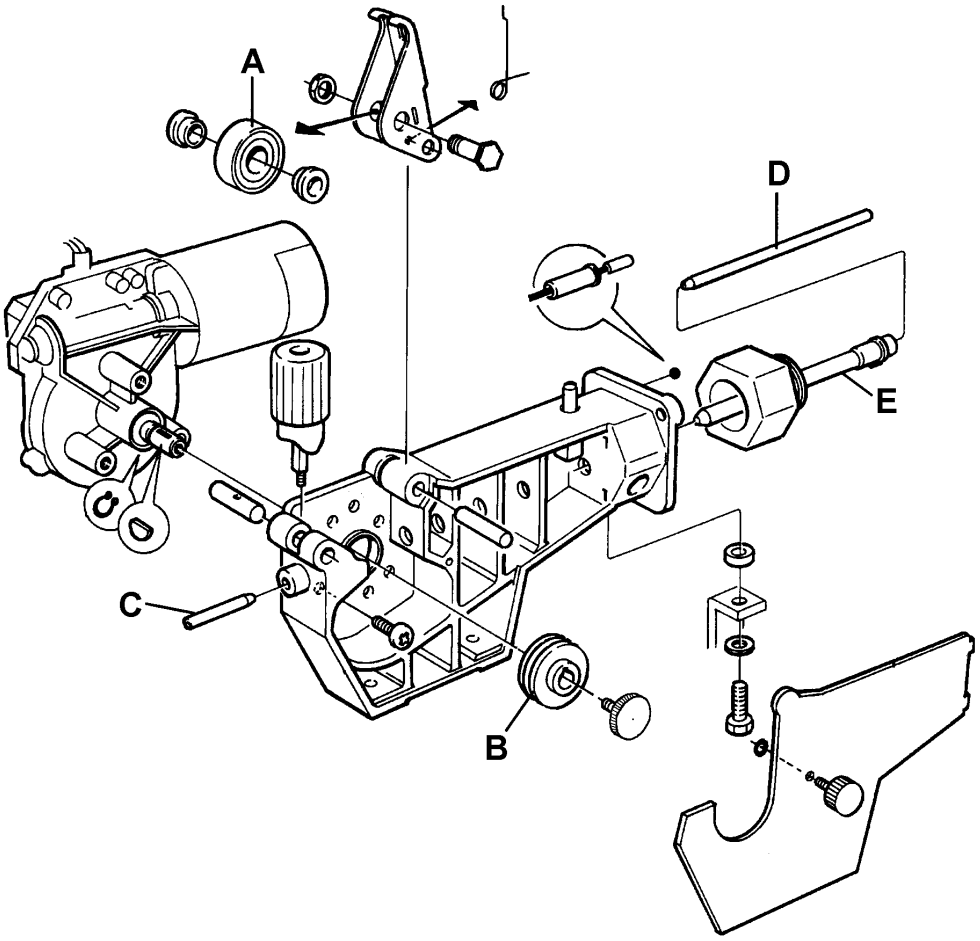

Welding with aluminium wires.

In order to weld with aluminium wires, proper rollers, nozzles and liners for aluminium wires MUST be used. It is recommended to use 3m long welding gun for aluminium wires, equipped with appropriate wear parts.

Accessories

Digital meter	0349 302 598	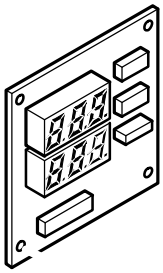
Transformer kit for CO^2 heater, 42V	0349 302 250	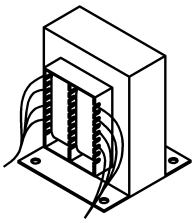
Traction kit for C141	0349 309 073	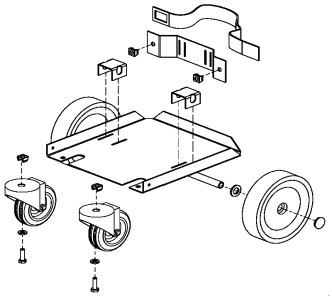

C141	t [mm]	d [mm]	Fe Ar+18%CO2		tubular gasless wire (Tubrod OK. 14.16) reverse polarity		SS Ar+2%CO2		AlMg5 Ar 100%		CuSi3 Ar+1%O2	
			1 - 10	1 - 4	1 - 10	1 - 4	1 - 10	1 - 4	1 - 10	1 - 4	1 - 10	1 - 4
	0,6	0,6	6	1			7	1				
		0,8	3,7	1	2,2	1					7,3	1
	0,8	0,6	6,5	2			7,5	2				
		0,8	4,5	2	3	1	5	1			7,7	1
	1,0	0,6	7,5	3			8,5	3				
		0,8	5	3	3,5	2	6	2				
		1,0							8,6	1		
	1,5	0,6	8,5	4			9	4				
		0,8	6,5	4	4	3	7	3				
		1,0							10	2		
	2,0	0,6										
141		0,8	7,5	4	5	4	8,3	4				
GIN: 0349 311 348		1,0							10	3		

C151	t [mm]	d [mm]	Fe Ar+18%CO2		tubular gasless wire (Tubrod OK. 14.16) reverse polarity		SS Ar+2%CO2		AlMg5 Ar 100%		CuSi3 Ar+1%O2	
			1 - 10	1 - 7	1 - 10	1 - 7	1 - 10	1 - 7	1 - 10	1 - 7	1 - 10	1 - 7
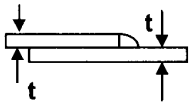	0,6	0,6	7	2			7	1				
		0,8	5,5	2	5	1	6	1			8	1
	0,8	0,6	7	3			7,5	2				
		0,8	5,5	3	5	2	6,5	2			8,5	2
	1,0	0,6	7	4			8	3				
		0,8	6	4	5	3	7,5	3			9	3
		1,0							9	1		
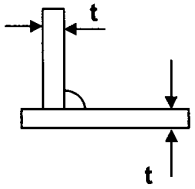	1,5	0,6	7,5	5			8,5	4				
		0,8	6,5	5	5,5	4	8,5	5				
		1,0							10	2		
	2,0	0,6	8,5	6			10	6				
		0,8	7,5	6	5,5	5	8,5	6				
		1,0							10	3		
C151	3,0	0,6	9	7			10	7				
		0,8	8	7	7	7	9	7				
GIN: 0349 311 347		1,0							10	7		

C171	T [mm]	d [mm]	Fe Ar+18%CO2 1 - 10	Fe Ar+18%CO2 1 - 8	Fe Ar+18%CO2 t 1 - 10	Fe CO2 1 - 10	Fe CO2 1 - 8	Fe CO2 t 1 - 10	tubular gasless wire (TUBROD OK. 14.16) REVERSE POLARITY 1 - 10	tubular gasless wire 1 - 8	tubular gasless wire t 1 - 10	SS Ar+2%CO2 1 - 10	SS Ar+2%CO2 1 - 8	AlMg5 Ar 100% 1 - 10	AlMg5 Ar 100% 1 - 8	CuSi3 Ar+1%O_2 1 - 10	CuSi3 Ar+1%O_2 1 - 8
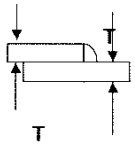	0,6	0,6	3	1		2,5	2					3	1				
		0,8	2,5	2		3	3					3	2				
	0,8	0,6	3,3	2		3,7	3					3,5	2				
		0,8	3	3		3,5	4		2,4	1		3,5	3			5	2
		1,0	2,5	3		2,5	4		2	1		3	3			3,5	1
	1,0	0,6	4	3		4	4					4,5	3				
		0,8	3,5	4		4	5		2,6	2		4,5	4			5,5	3
		1,0	3	4		3	5		2,3	2		4	4	4,5	1	3,7	2
	1,5	0,6	5	4		5	5					6	4				
		0,8	4	5		4	6		3	3		5,5	5				
		1,0	3,5	5		3,2	6		2,5	3		5	5	5,5	2		
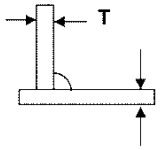	2,0	0,6	6	5		6,5	6					7,5	5				
		0,8	5	6		5	7		3,5	4		6,5	6				
		1,0	4	6		3,8	7		3	4		5,5	7	6	3		
	3,0	0,6	8	8		9,5	8					9	6				
		0,8	6,5	7		6	8		5	6		7,5	7				
		1,0	4,5	7		4,5	8		4	6		6,5	8	7	7		
	4,0	0,8	8	8		6,5	8		6,5	7		6,5	8				
		1,0	5,5	8		5	8		5	7		6	8	8,5	8		
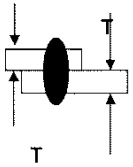	0,6	0,6	7,5	6	5	8	7	6									
		0,8	5,5	5	6	5	5	5	4,5	4	5						
		1,0	3	4	5	3,2	6	5	3	4	5						
	0,8	0,6	7,5	7	6	8	7	7									
		0,8	6	6	6	5,5	6	5	5,5	5	5						
		1,0	3,5	5	5	3,8	7	5	4	6	5						
	1,0	0,6	8	8	7	9,5	8	7									
		0,8	6,5	7	6	6	7	5	6,5	6	6						
		1,0	4	6	6	3,8	7	6	5,5	7	6						
	1,5	0,6															
C171		0,8	7	8	6	6,5	8	7	7	7	6						
GIN: 0349 311 357		1,0	5,5	8	6	5	8	7	6,5	8	7						

C201	T [mm]	d [mm]	Fe Ar+18%CO2			Fe CO2			tubular gasless wire (TUBROD OK. 14.16) REVERSE POLARITY			SS Ar+2%CO2		AlMg5 Ar 100%		CuSi3 Ar+1%O_2	
			1 - 10	1 - 12	t 1 - 10	1 - 10	1 - 12	t 1 - 10	1 - 10	1 - 12	t 1 - 10	1 - 10	1 - 12	1 - 10	1 - 12	1 - 10	1 - 12
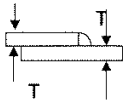	0,6	0,6	2,8	1		3	3					3,5	2				
		0,8	2,5	2		2,3	4		2,3	1		3	2			3,5	1
	0,8	0,6	3	2		3,5	4					4	3				
		0,8	2,7	3		2,8	5		2,5	1		3,6	3			4	2
		1,0	2,4	3		2,4	5		2	1		3	4			3,1	2
	1,0	0,6	3,5	3		4	5					5,5	4				
		0,8	3	4		3	6		2,5	2		4	4			4,5	3
		1,0	2,5	4		2,6	6		2,2	2		3,5	5	4,5	1	4	3
	1,5	0,6	4,5	5		4,5	6					7	6				
		0,8	3,5	5		3,5	7		2,6	4		5,2	6				
		1,0	2,9	5		3	7		2,5	4		4	6	5,5	3		
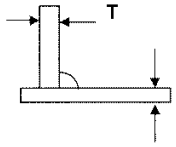	2,0	0,6	9	8		5	7					8,5	7				
		0,8	5	7		4,5	8		2,8	6		8	9				
		1,0	3,5	7		3,5	9		2,6	6		5	8	7	5		
	3,0	0,6	10	12		8	9					10	10				
		0,8	6,5	9		5,5	10		3,5	7		6,5	10				
		1,0	4,5	9		4	10		3	7		5	10	8	8		
	4,0	0,8	8,5	11		6	11		5	8		7	11				
		1,0	5,5	11		4,5	11		4	8		5	11	9	11		
	5,0	0,8	8,5	12		7	12					7,5	12				
		1,0	6	12		5,5	12		4,5	10		5,5	12	10	12		
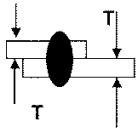	0,6	0,6	9	8	4	5	7	6									
		0,8	5	7	5	4,5	8	5	3,5	7	5						
		1,0	4	9	4	4	10	4	3	7	5						
	0,8	0,6	9	8	5	6	10	6									
		0,8	6,5	9	5	5	9	6	5	8	5						
		1,0	4,5	10	5	4	10	5	4	8	5						
	1,0	0,6	9	10	6	7,5	11	7									
		0,8	8,5	11	4	6	11	6	5,5	12	7						
		1,0	5	11	6	4,5	11	5	5	12	7						
C201	1,5	0,6															
		0,8	8,5	12	7	7	12	7									
GIN: 0349 311 437		1,0	6	12	7	5	12	9	6,5	12	10						

C251	T [mm]	d [mm]	Fe Ar+18%CO2			Fe CO2			SS Ar+2%CO2			AlMg5 Ar 100%			tubular gasless wire (TUBROD OK. 14.16) REVERSE POLARITY		
			1 - 10	1 - 12	t 1 - 10	1 - 10	1 - 12	t 1 - 10	1 - 10	1 - 12	t 1 - 10	1 - 10	1 - 12	t 1 - 10	1 - 10	1 - 12	t 1 - 10
	0,6	0,6	3,0	1		3,5	3		3,5	1							
		0,8	2,0	1		2,1	3										
	0,8	0,6	4,0	2		4,0	4		3,5	2							
		0,8	2,6	2		2,5	4		2,5	1					2,0	1	
		1,0	2,0	1		2,0	3		2,0	1					1,5	1	
		1,2	1,8	2													
	1,0	0,6	4,5	3		4,5	5		4,0	3							
		0,8	3,5	3		2,7	5		3,0	2					2,2	2	
		1,0	2,5	2		2,2	4		2,5	2		4,7	1		2,0	2	
		1,2	2,0	3		1,8	4		2,0	1		4,5	1		1,5	3	
	1,5	0,6	5,0	4		5,0	6		5,0	4							
		0,8	4,0	4		3,5	6		3,0	3					2,8	3	
		1,0	2,5	3		2,5	5		3,0	3		5,5	2		2,5	3	
		1,2	2,4	4		2,0	5		2,2	2		5,0	2		2,0	4	
	2,0	0,6	5,5	5		5,5	7		7,0	6							
		0,8	5,0	6		4,5	7		5,0	5					3,0	4	
		1,0	3,0	4		3,0	6		4,0	5		6,0	3		3,0	5	
		1,2	3,0	5		2,5	6		2,5	4		5,5	4		3,0	6	
	3,0	0,6	8,0	10		7,5	10		9,5	9							
		0,8	5,5	7		5,0	9		6,0	7					4,0	6	
		1,0	4,0	6		4,0	9		4,5	6		6,5	6		3,5	6	
		1,2	4,0	8		3,0	8		3,5	6		6,0	6		3,5	8	
	4,0	0,8	6,5	9		6,0	10		6,0	9					4,5	7	
		1,0	4,0	8		4,8	10		5,5	8		7,0	8		4,5	8	
		1,2	4,0	9		3,0	9		4,2	8		5,5	8		4,0	10	
	5,0	0,8	7,5	11		6,5	11		6,5	10					7,0	8	
		1,0	5,5	10		5,0	11		5,0	10		8,0	10		5,5	9	
		1,2	4,5	11		4,0	11		4,5	10		6,0	10		4,5	11	
	6,0	0,8	7,0	12		7,0	12		7,5	12							
		1,0	6,5	12		5,5	12		6,0	12		10	12		8,5	11	
		1,2	4,5	12		5,0	12		4,6	12		7,0	12		5,0	12	
	0,6	0,6	5,0	4	6	5,5	7	6									
		0,8	5,5	9	3	4,5	8	4							5,0	6	4
		1,0	3,5	8	4	4,0	9	4							5,0	8	4
		1,2	3,5	9	4	3,0	9	4							3,0	8	4
	0,8	0,6	5,0	6	6	7,5	10	6									
		0,8	5,5	9	4	5,0	9	5							6,0	7	5
		1,0	4,5	10	4	4,5	10	4							5,5	9	4
		1,2	3,5	10	4	3,5	10	4							4,5	10	4
	1,0	0,6	8,0	9	8	7,5	10	7									
		0,8	7,0	11	5	7,0	12	5							7,0	8	5
		1,0	5,0	11	5	5,0	11	4							6,5	10	5
		1,2	4,0	11	5	4,0	11	4							5,0	11	4
	1,5	0,8	7,5	12	7	7,0	12	7									
		1,0	6,0	12	6	5,5	12	5							7,5	11	5
GIN: 0349 307 225		1,2	4,5	12	6	4,5	12	6							5,0	11	5

ESAB subsidiaries and representative offices

Europe

AUSTRIA
ESAB Ges.m.b.H
Vienna-Liesing
Tel: +43 1 888 25 11
Fax: +43 1 888 25 11 85

BELGIUM
S.A. ESAB N.V.
Brussels
Tel: +32 2 745 11 00
Fax: +32 2 745 11 28

BULGARIA
ESAB Kft Representative Office
Sofia
Tel/Fax: +359 2 974 42 88

THE CZECH REPUBLIC
ESAB VAMBERK s.r.o.
Vamberk
Tel: +420 2 819 40 885
Fax: +420 2 819 40 120

DENMARK
Aktieselskabet ESAB
Herlev
Tel: +45 36 30 01 11
Fax: +45 36 30 40 03

FINLAND
ESAB Oy
Helsinki
Tel: +358 9 547 761
Fax: +358 9 547 77 71

FRANCE
ESAB France S.A.
Cergy Pontoise
Tel: +33 1 30 75 55 00
Fax: +33 1 30 75 55 24

GERMANY
ESAB GmbH
Solingen
Tel: +49 212 298 0
Fax: +49 212 298 218

GREAT BRITAIN
ESAB Group (UK) Ltd
Waltham Cross
Tel: +44 1992 76 85 15
Fax: +44 1992 71 58 03

ESAB Automation Ltd
Andover
Tel: +44 1264 33 22 33
Fax: +44 1264 33 20 74

HUNGARY
ESAB Kft
Budapest
Tel: +36 1 20 44 182
Fax: +36 1 20 44 186

ITALY
ESAB Saldatura S.p.A.
Bareggio (Mi)
Tel: +39 02 97 96 8.1
Fax: +39 02 97 96 87 01

THE NETHERLANDS
ESAB Nederland B.V.
Amersfoort
Tel: +31 33 422 35 55
Fax: +31 33 422 35 44

NORWAY
AS ESAB
Larvik
Tel: +47 33 12 10 00
Fax: +47 33 11 52 03

POLAND
ESAB Sp.zo.o.
Katowice
Tel: +48 32 351 11 00
Fax: +48 32 351 11 20

PORTUGAL
ESAB Lda
Lisbon
Tel: +351 8 310 960
Fax: +351 1 859 1277

ROMANIA
ESAB Romania Trading SRL
Bucharest
Tel: +40 316 900 600
Fax: +40 316 900 601

RUSSIA
LLC ESAB
Moscow
Tel: +7 (495) 663 20 08
Fax: +7 (495) 663 20 09

SLOVAKIA
ESAB Slovakia s.r.o.
Bratislava
Tel: +421 7 44 88 24 26
Fax: +421 7 44 88 87 41

SPAIN
ESAB Ibérica S.A.
Alcalá de Henares (MADRID)
Tel: +34 91 878 3600
Fax: +34 91 802 3461

SWEDEN
ESAB Sverige AB
Gothenburg
Tel: +46 31 50 95 00
Fax: +46 31 50 92 22

ESAB international AB
Gothenburg
Tel: +46 31 50 90 00
Fax: +46 31 50 93 60

SWITZERLAND
ESAB AG
Dietikon
Tel: +41 1 741 25 25
Fax: +41 1 740 30 55

UKRAINE
ESAB Ukraine LLC
Kiev
Tel: +38 (044) 501 23 24
Fax: +38 (044) 575 21 88

North and South America

ARGENTINA
CONARCO
Buenos Aires
Tel: +54 11 4 753 4039
Fax: +54 11 4 753 6313

BRAZIL
ESAB S.A.
Contagem-MG
Tel: +55 31 2191 4333
Fax: +55 31 2191 4440

CANADA
ESAB Group Canada Inc.
Missisauga, Ontario
Tel: +1 905 670 02 20
Fax: +1 905 670 48 79

MEXICO
ESAB Mexico S.A.
Monterrey
Tel: +52 8 350 5959
Fax: +52 8 350 7554

USA
ESAB Welding & Cutting Products
Florence, SC
Tel: +1 843 669 44 11
Fax: +1 843 664 57 48

Asia/Pacific

AUSTRALIA
ESAB South Pacific
Archerfield BC QLD 4108
Tel: +61 1300 372 228
Fax: +61 7 3711 2328

CHINA
Shanghai ESAB A/P
Shanghai
Tel: +86 21 2326 3000
Fax: +86 21 6566 6622

INDIA
ESAB India Ltd
Calcutta
Tel: +91 33 478 45 17
Fax: +91 33 468 18 80

INDONESIA
P.T. ESABindo Pratama
Jakarta
Tel: +62 21 460 0188
Fax: +62 21 461 2929

JAPAN
ESAB Japan
Tokyo
Tel: +81 45 670 7073
Fax: +81 45 670 7001

MALAYSIA
ESAB (Malaysia) Snd Bhd
USJ
Tel: +603 8023 7835
Fax: +603 8023 0225

SINGAPORE
ESAB Asia/Pacific Pte Ltd
Singapore
Tel: +65 6861 43 22
Fax: +65 6861 31 95

SOUTH KOREA
ESAB SeAH Corporation
Kyungnam
Tel: +82 55 269 8170
Fax: +82 55 289 8864

UNITED ARAB EMIRATES
ESAB Middle East FZE
Dubai
Tel: +971 4 887 21 11
Fax: +971 4 887 22 63

Africa

EGYPT
ESAB Egypt
Dokki-Cairo
Tel: +20 2 390 96 69
Fax: +20 2 393 32 13

SOUTH AFRICA
ESAB Africa Welding & Cutting Ltd
Durbanvill 7570 - Cape Town
Tel: +27 (0)21 975 8924

Distributors

For addresses and phone numbers to our distributors in other countries, please visit our home page

www.esab.com

www.esab.com